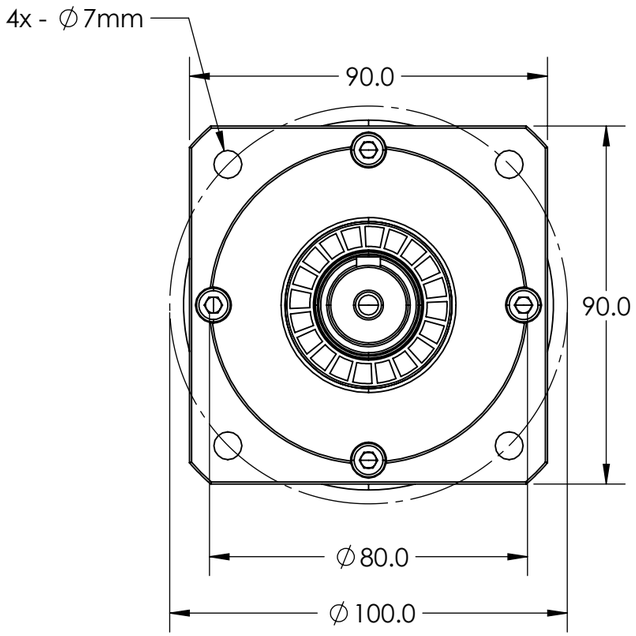

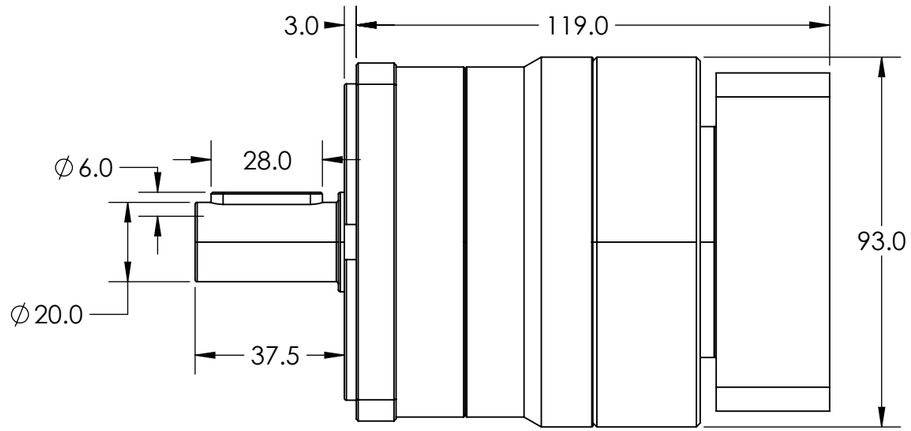

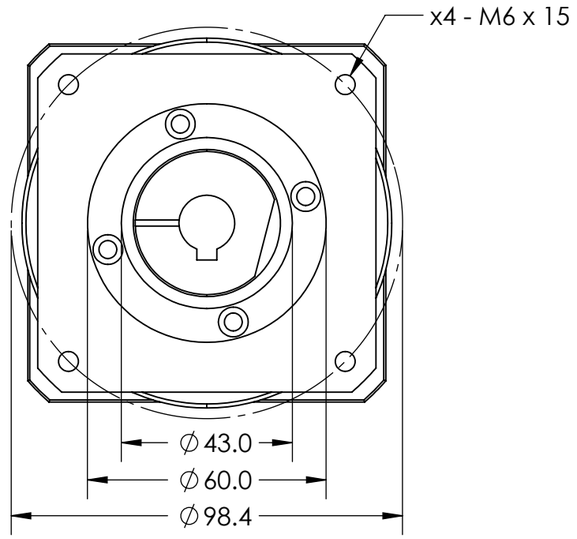

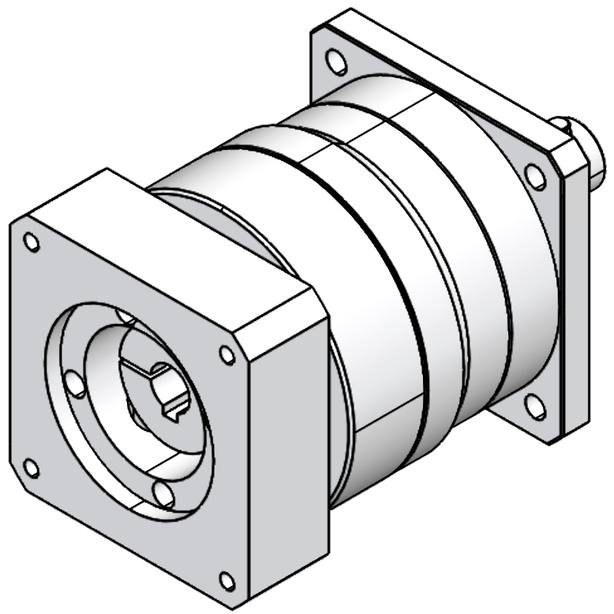

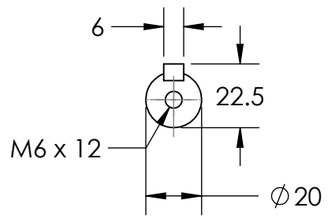

Common Specifications	
Rated Input Speed	3000 rpm
Max Input Speed	5000 rpm
Protection Class	IP65
Backlash	<7 arcmin
Transmission Efficiency	97%
Service Life	20000 Hrs
Noise	65 dB
Envirmental Temperature	-15°C / +90°C
Inertia	0.61-0.45 Kg/cm²
Weight	2.5 Kg
Torsional Rigidity	12 Nm/arcmin

Ratio Dependant Specifications			
	Ratio	Rated Torque	Max Torque
PLF-090-3-86-20-S2-P2	3:1	113 Nm	339 Nm
PLF-090-4-86-20-S2-P2	4:1	115 Nm	345 Nm
PLF-090-5-86-20-S2-P2	5:1	118 Nm	354 Nm
PLF-090-7-86-20-S2-P2	7:1	110 Nm	330 Nm
PLF-090-10-86-20-S2-P2	10:1	56 Nm	168 Nm

PALMER automation

© COPYRIGHT 9/23/2026

WEBSITE:
palmerautomation.nz

PHONE:
+64 07 5711322

EMAIL:
info@palmerautomation.nz

PLANETARY GEARBOX SERIES:

PART NUMBER:
PLF-090-Nema 34 Series

SCALE: 1:1.5 UNITS: MM | DRAWING VERSION: **1** | DATE: 9/23/2026