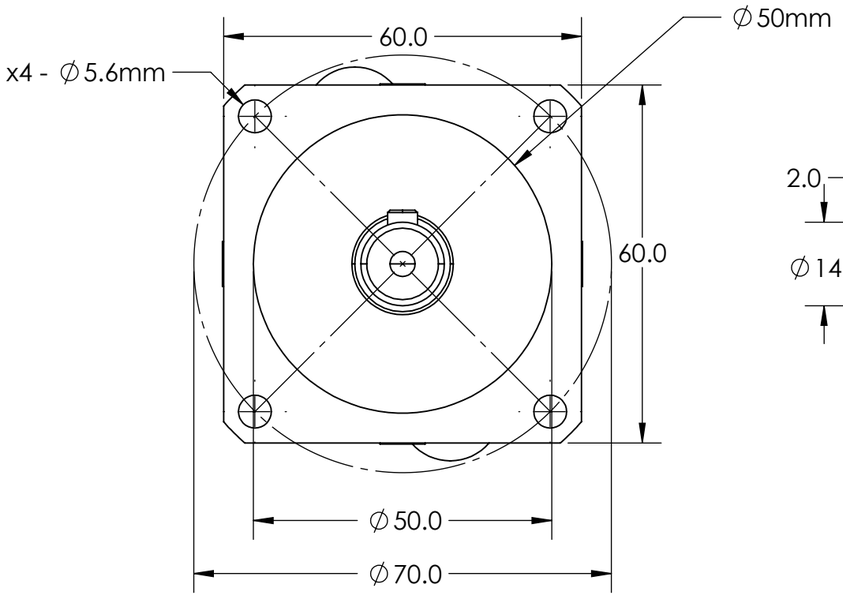

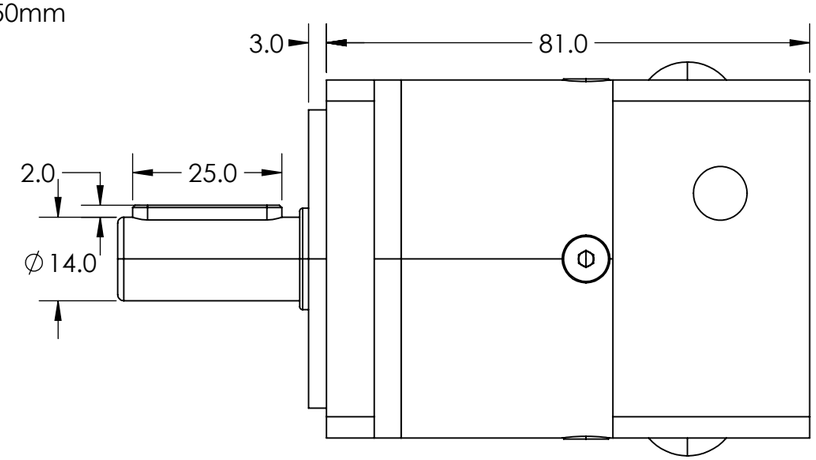

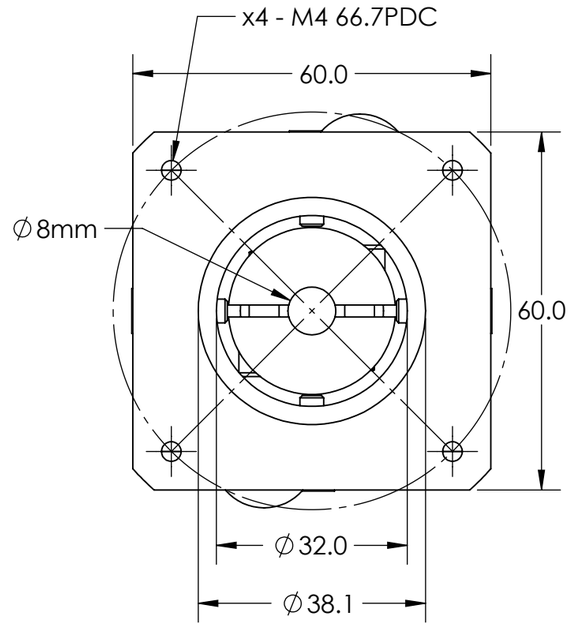

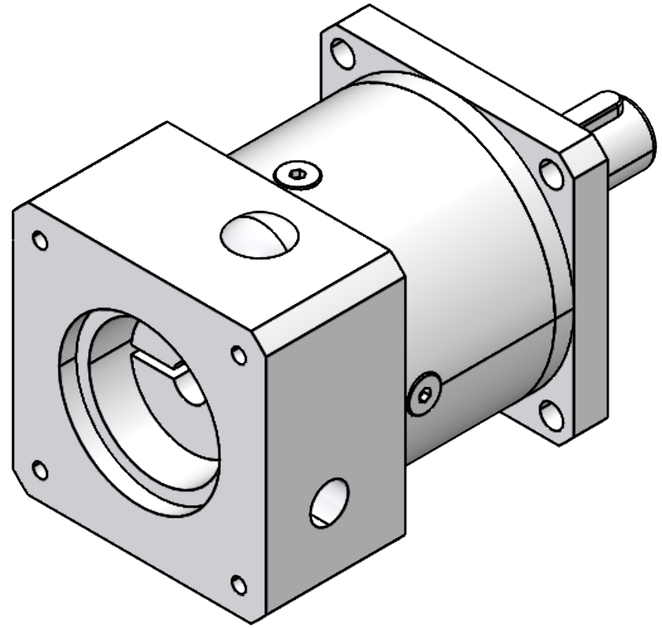

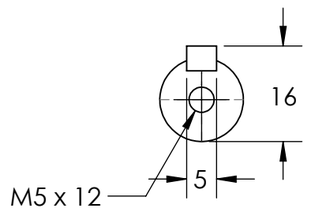

Common Specifications	
Rated Input Speed	3000 rpm
Max Input Speed	5000 rpm
Protection Class	IP65
Backlash	<8 arcmin
Transmission Efficiency	97%
Service Life	20000 Hrs
Noise	63 dB
Envirmental Temperature	-20°C / +90°C
Inertia	0.13 Kg/cm²
Weight	0.99 Kg
Torsional Rigidity	37 Nm/arcmin

Ratio Dependant Specifications			
	Ratio	Rated Torque	Max Torque
PLF-060-3-57-14-S2-P2	3:1	20 Nm	60 Nm
PLF-060-5-57-14-S2-P2	5:1	31 Nm	93 Nm

PALMER automation

© COPYRIGHT 9/23/2026

WEBSITE: palmerautomation.nz
PHONE: +64 07 5711322
EMAIL: info@palmerautomation.nz

PLANETARY GEARBOX SERIES: PLF-060

PART NUMBER: PLF-060-Nema 23 Series

SCALE: 1:1 | UNITS: MM | DRAWING VERSION: 1 | DATE: 9/23/2026